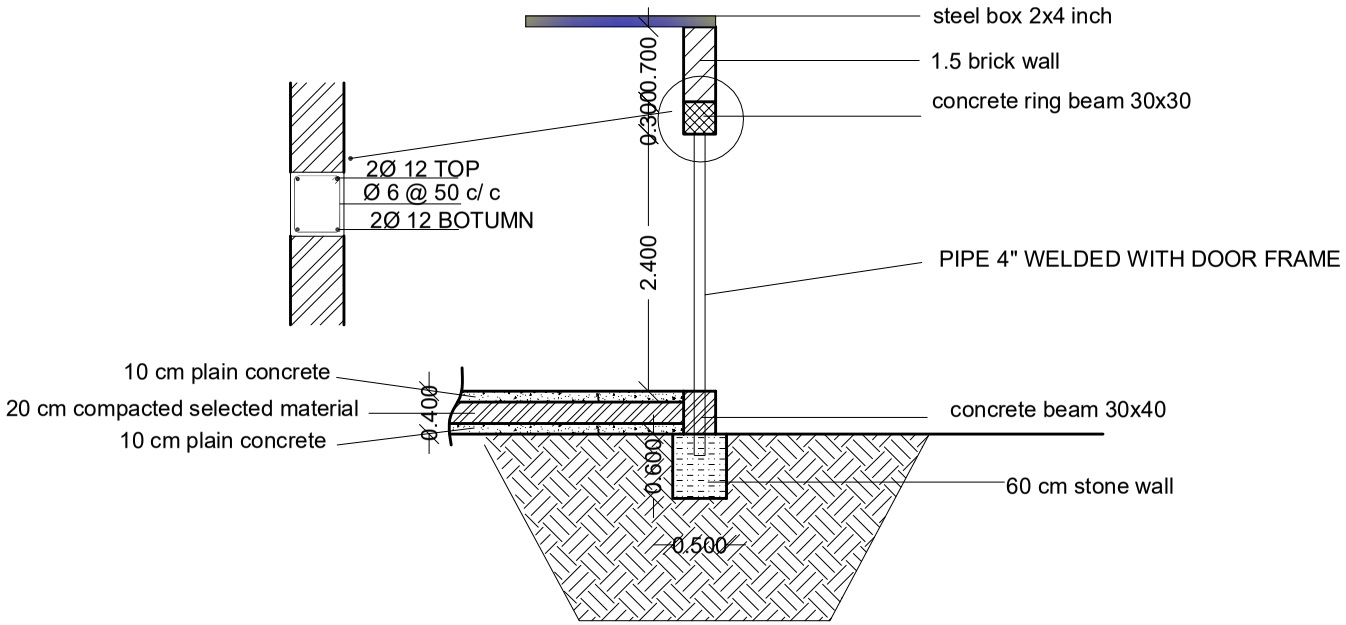
steel box 2x4 inch
1.5 brick wall
concrete ring beam 30x30
0.700
0.300
2Ø 12 TOP
Ø 6 @ 50 c/ c
2Ø 12 BOTUMN
2.400
PIPE 4" WELDED WITH DOOR FRAME
10 cm plain concrete
20 cm compacted selected material
10 cm plain concrete
0.400
concrete beam 30x40
0.600
60 cm stone wall
0.500

section ( C- C )